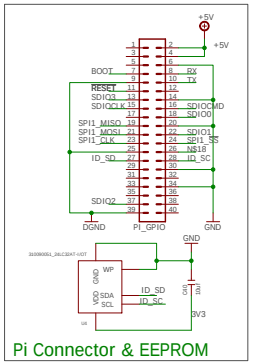

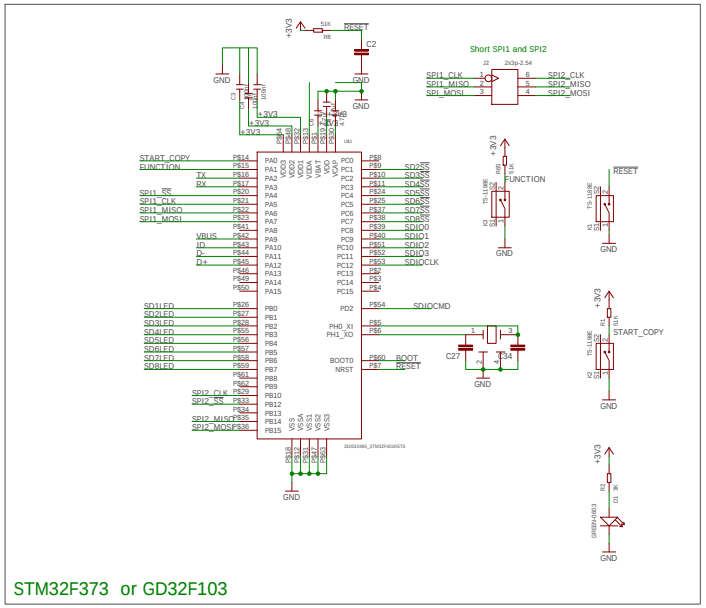

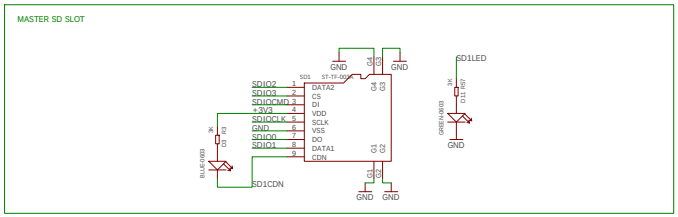

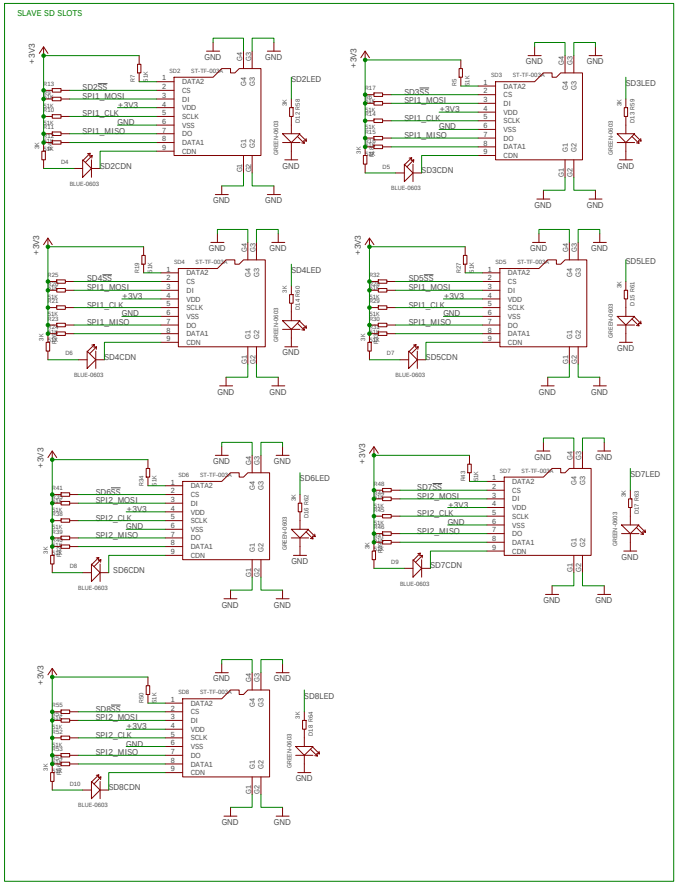

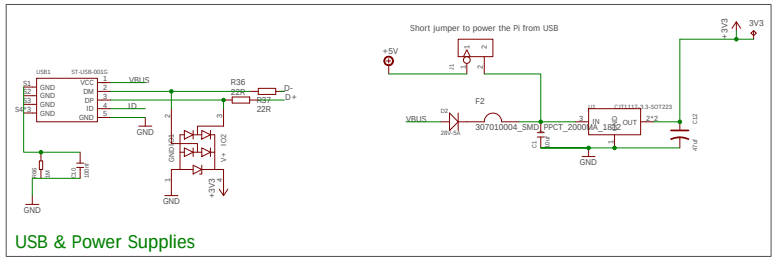

To do:
Check the passlves
Layout (100x100mm board with everything on the front edge)
Consider adding a multiplexer for stacking

open hardware

Open SD Card Copier
J. Devine Sept '17
Work in Progress

TITLE: sd card copier

Document Number: http://github.com/pingud98/SDCopier

REV: 0

Date: 24/09/2017 13:32

Sheet: 1/1

Thanks to the myStorm guys, I used your STM32 parts as inspiration!

24/09/2017 13:32 f=0.45 \\cern.ch\dfs\Users\j\jdevine\Desktop\sdcopier\sd card copier.sch (Sheet: 1/1)